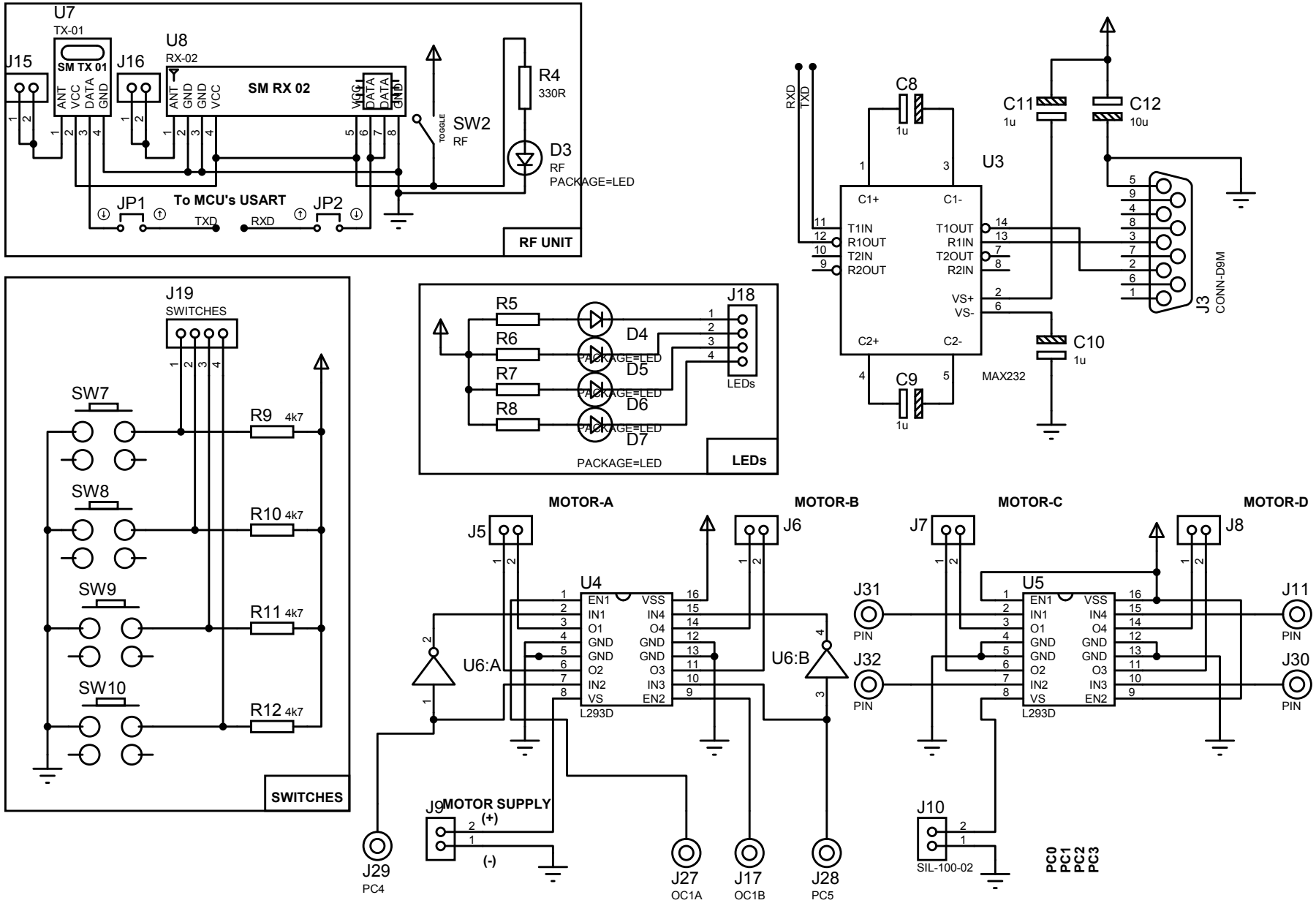
U7
TX-01
SM TX 01
J15
J16
U8
RX-02
SM RX 02
ANT
VCC
DATA
GND
VCC
DATA
DATA
GND
SW2
TOGGLE
RF
R4
330R
D3
RF
PACKAGE=LED
JP1
To MCU's USART
JP2
TXD
RXD
RF UNIT
J19
SWITCHES
SW7
SW8
SW9
SW10
R9 4k7
R10 4k7
R11 4k7
R12 4k7
SWITCHES
R5
R6
R7
R8
D4
D5
D6
D7
PACKAGE=LED
J18
LEDs
LEDs
RXD
TXD
C8
1u
C11
1u
C12
10u
U3
C1+
C1-
T1IN
R1OUT
T2IN
R2OUT
T1OUT
R1IN
T2OUT
R2IN
VS+
VS-
C2+
C2-
C9
1u
C10
1u
MAX232
J3
CONN-D9M
MOTOR-A
MOTOR-B
MOTOR-C
MOTOR-D
J5
J6
J7
J8
U4
U5
EN1
IN1
O1
GND
GND
O2
IN2
VS
VSS
IN4
O4
GND
GND
O3
IN3
EN2
L293D
U6:A
U6:B
J31
J32
J11
J30
PIN
J9
MOTOR SUPPLY
(+)
(-)
J29
PC4
J27
OC1A
J17
OC1B
J28
PC5
J10
SIL-100-02
PC0
PC1
PC2
PC3